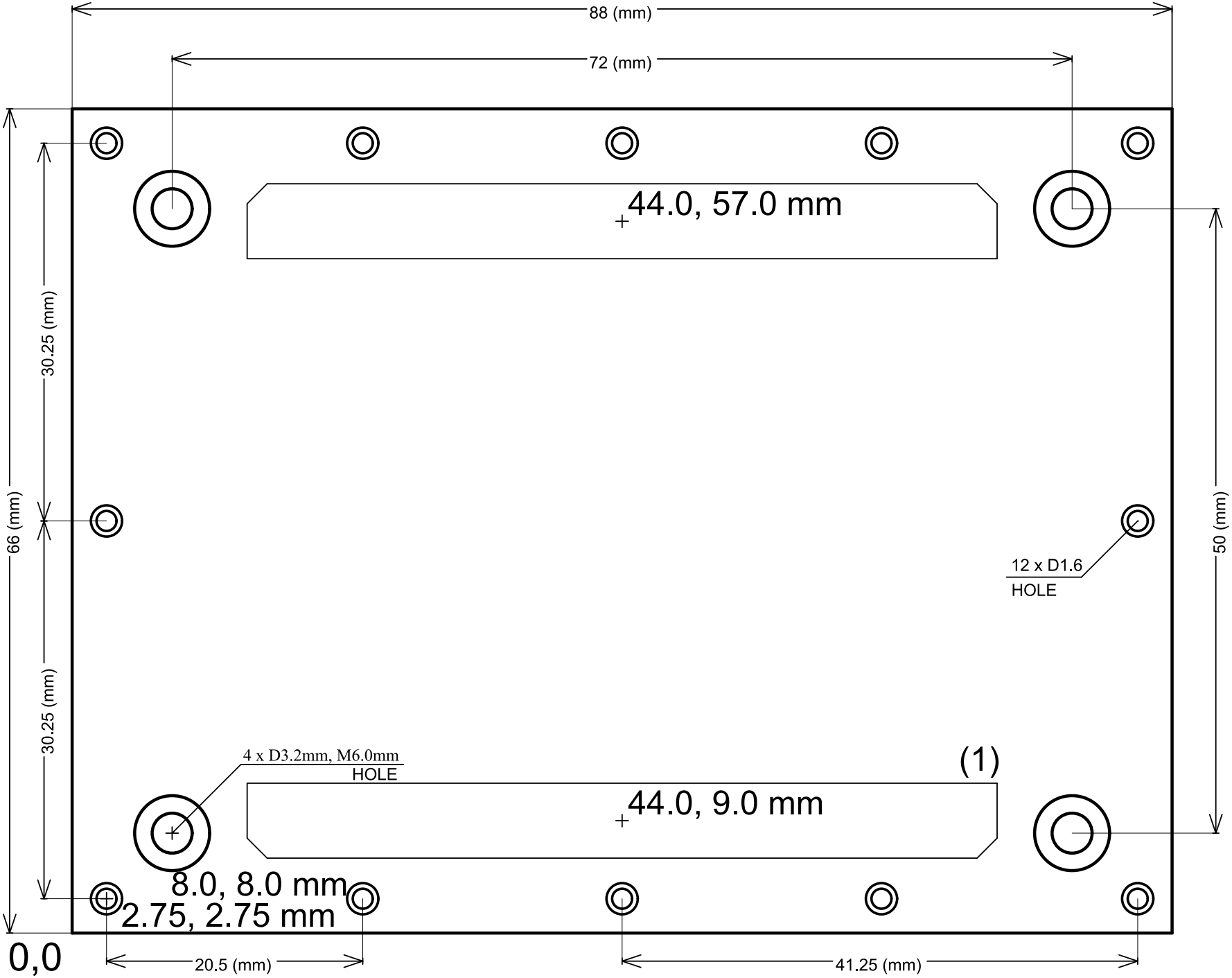

Note:

(1) Connector QTH-060-01-F-D-DP-A