SI-STM32F4X7-SD

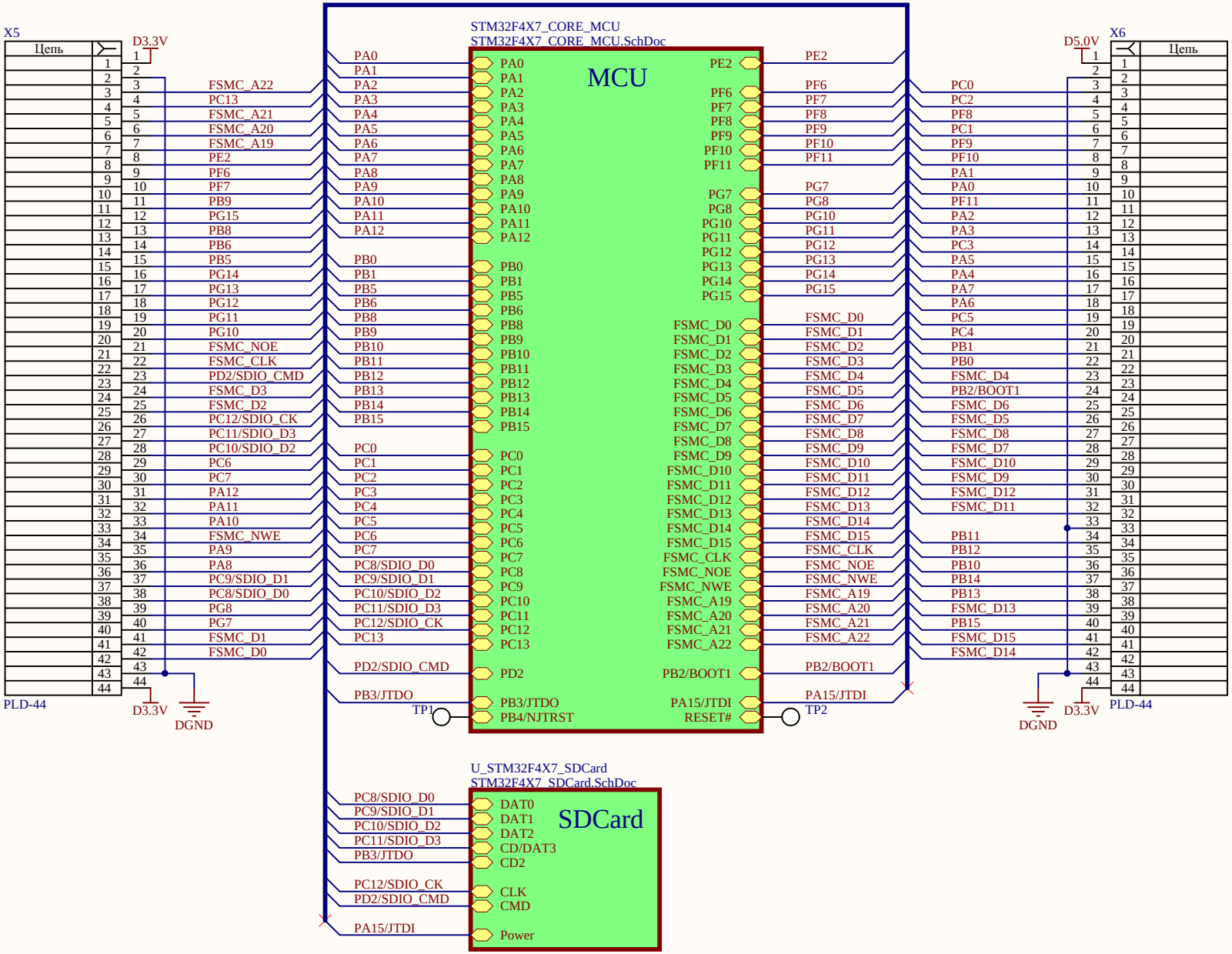

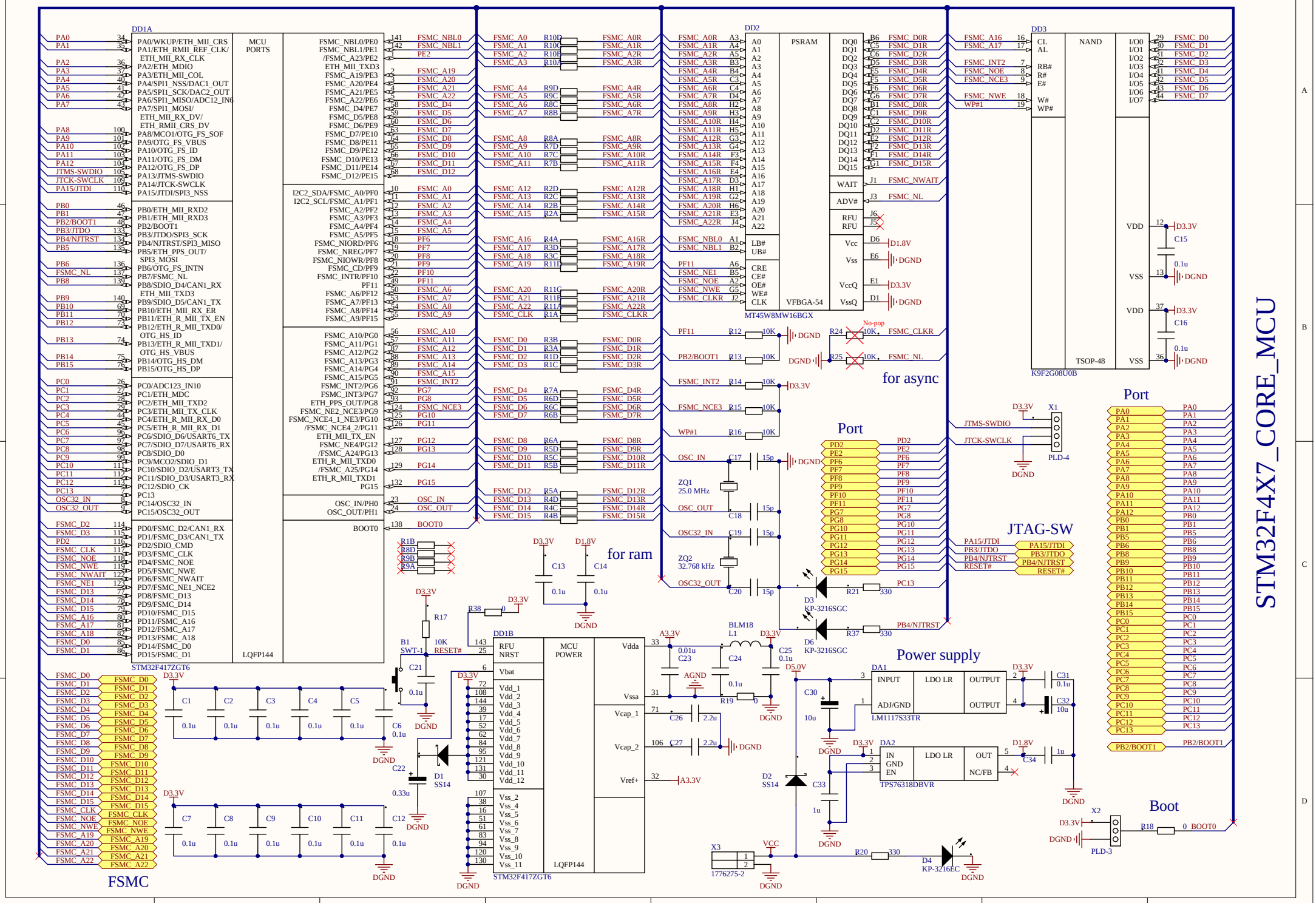
STM32F4X7_CORE_MCU
DD1A
STM32F417ZGT6
LQFP144
MCU PORTS
DD1B
MCU POWER
DD2
MT45W8MW16BGX
PSRAM
VFBGA-54
DD3
K9F2G08U0B
NAND
TSOP-48
for ram
for async
Port
JTAG-SW
Power supply
LM1117S33TR
TPS76318DBVR
Boot
FSMC
ZQ1 25.0 MHz
ZQ2 32.768 kHz
D3 KP-3216SGC
D6 KP-3216SGC
D4 KP-3216EC
D1 SS14
D2 SS14
B1 SWT-1
X1 PLD-4
X2 PLD-3
X3 1776275-2
R18 0 BOOT0
DGND
D3.3V
D1.8V
VCC
A3.3V
D5.0V

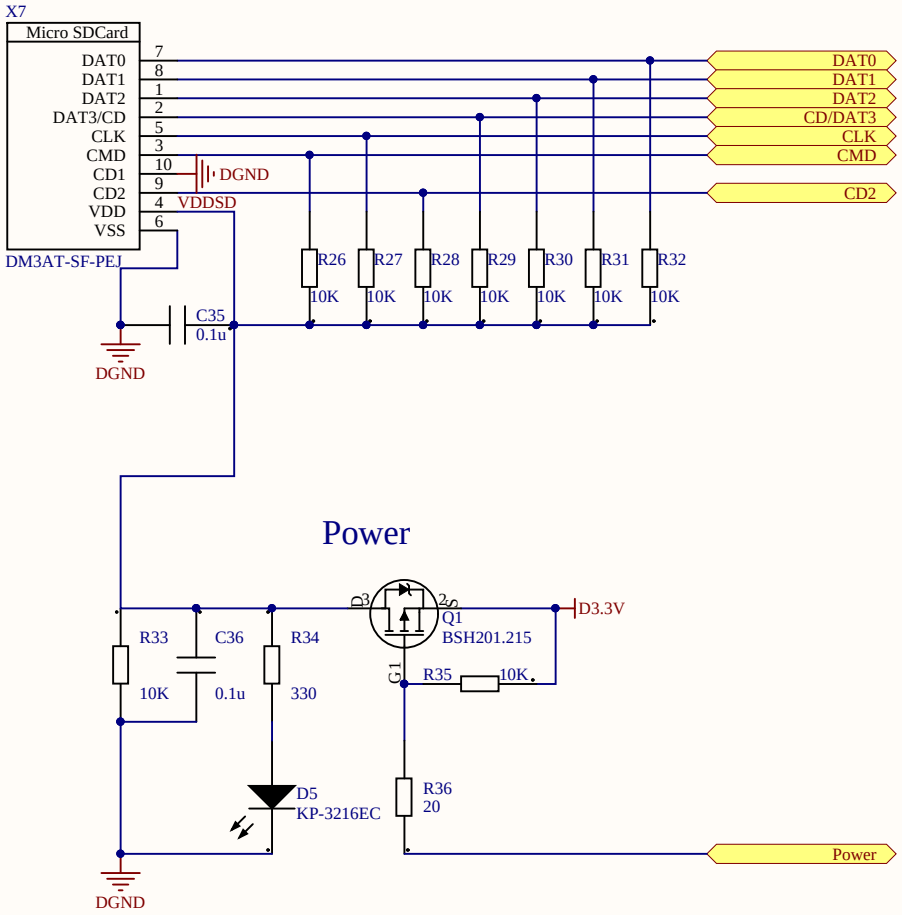
X7
Micro SDCard
DAT0
DAT1
DAT2
DAT3/CD
CLK
CMD
CD1
CD2
VDD
VSS
7
8
1
2
5
3
10
9
4
6
DGND
VDDSD
DM3AT-SF-PEJ
C35
0.1u
DGND
R26
R27
R28
R29
R30
R31
R32
10K
DAT0
DAT1
DAT2
CD/DAT3
CLK
CMD
CD2
Power
D3
2
S
Q1
BSH201.215
D3.3V
R33
10K
C36
0.1u
R34
330
G1
R35
10K
D5
KP-3216EC
R36
20
Power
DGND

SDCard